Article 108198

Fun Box 11 30’360 kg
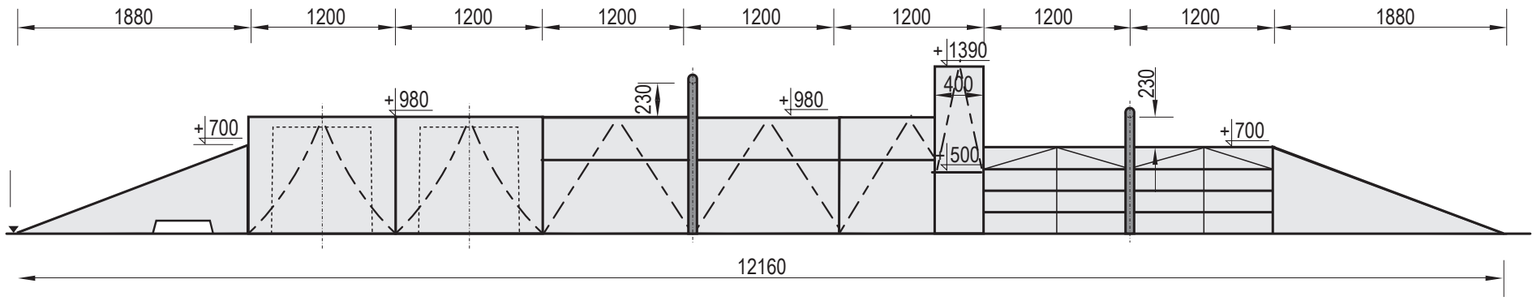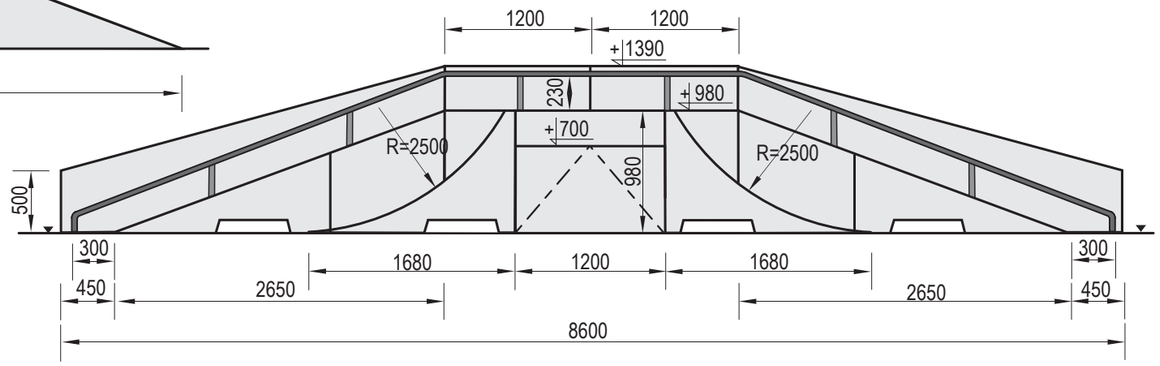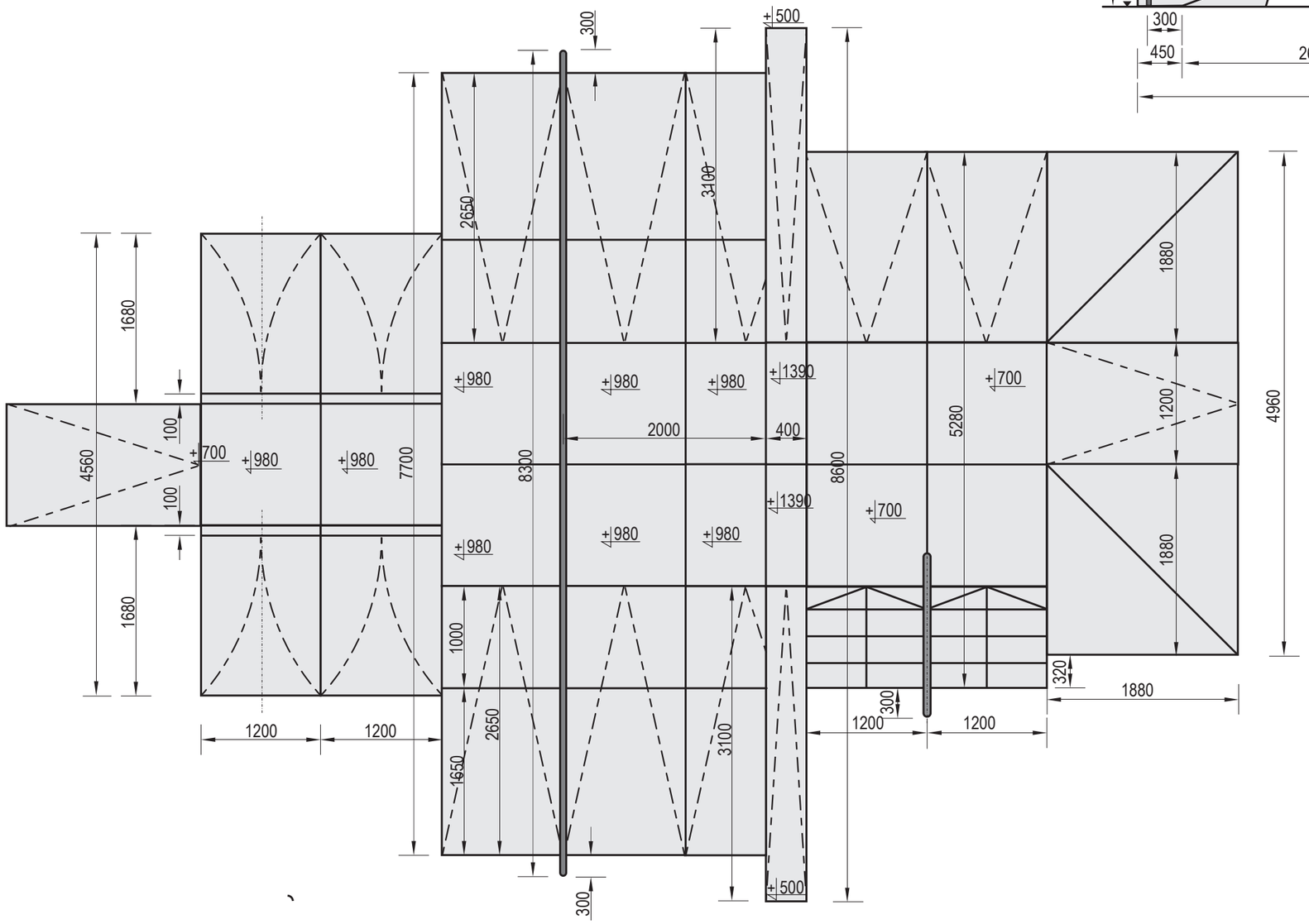
Lactell
Play & Sport